BLUESTAR 60" PLATINUM SERIES

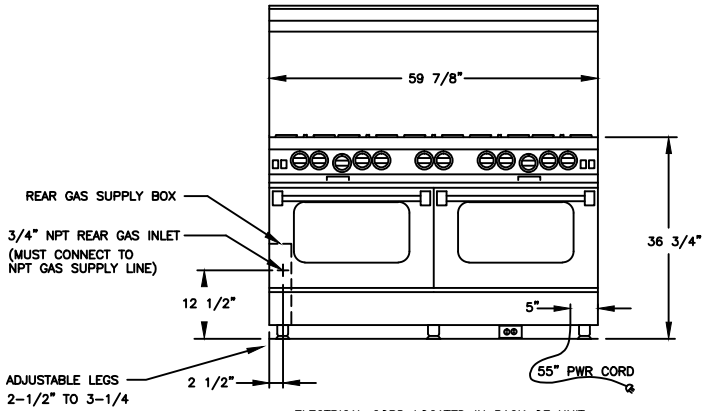

ELECTRICAL CORD LOCATED IN BACK OF UNIT

LOCATION OF ELECTRICAL OUTLET MUST
NOT BE HIGHER THAN 3" FROM FLOOR IF LOCATED BEHIND
THE UNIT OR CAN BE LOCATED IN AN ADJOINING CABINET.

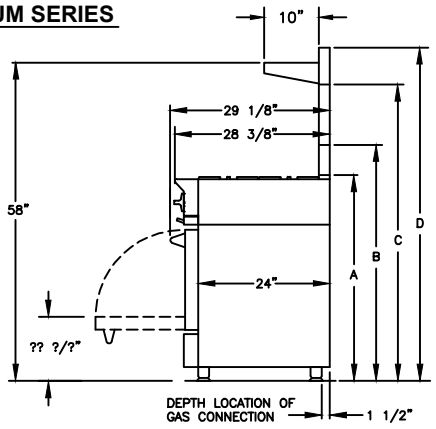

A – ISLAND TRIM HEIGHT – 37 1/2"
B – 6" STANDARD BACKGUARD HEIGHT – 43"
C – 17" BACKGUARD HEIGHT – 54"
D – HIGH SHELF BACKGUARD HEIGHT – 60 3/4"

CONFIGURATIONS

BSP6010B

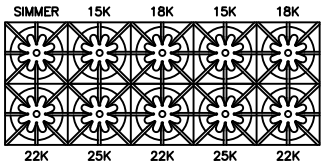

SPECIFICATIONS:

- OVEN INTERIOR: _ _ _ _ _ _ _ _ 26.25"W x 20"D x 15"H
- SIMMER BURNER RATING _ _ _ _ _ 9,000 BTU, 130°F
- TOP NOVA BURNER RATING _ _ _ _ 15,000 BTU
- TOP SUPERNOVA BURNER RATING _ _ 18,000 BTU
- TOP PRIMANOVA BURNER RATING _ _ 22,000 BTU
- TOP ULTRANOVA BURNER RATING _ _ 25,000 BTU
- CAST IRON INTERCHANGABLE GRIDDLE CHARBROILER SYSTEM
- PowR OVEN BURNER RATING _ _ _ 25,000 BTU
- OVEN INFRARED BROILER RATING _ _ 15,000 BTU
- ELECTRICAL REQUIREMENTS _ _ _ _ 120V, 60Hz, 15 AMPS, 1 PH
  (UNIT MUST BE ON A NON-GFCI, DEDICATED OUTLET)
- OPERATING GAS PRESSURE _ _ _ _ NAT: 5.0" WC
  LP: 10.0" WC
- INSTALLATION CLEARANCE _ _ _ _ _ 0" SIDE CABINET
  0" BACK WALL

OPTIONS

- CASTERS
- ADDITIONAL OVEN RACK
- FULL EXTENSION OVEN RACK
- 750+ CUSTOM COLORS AND FINISHES

VISIT www.bluestarcooking.com FOR CUSTOM CONFIGURATIONS

File: 2015_BSP6010B.dwg

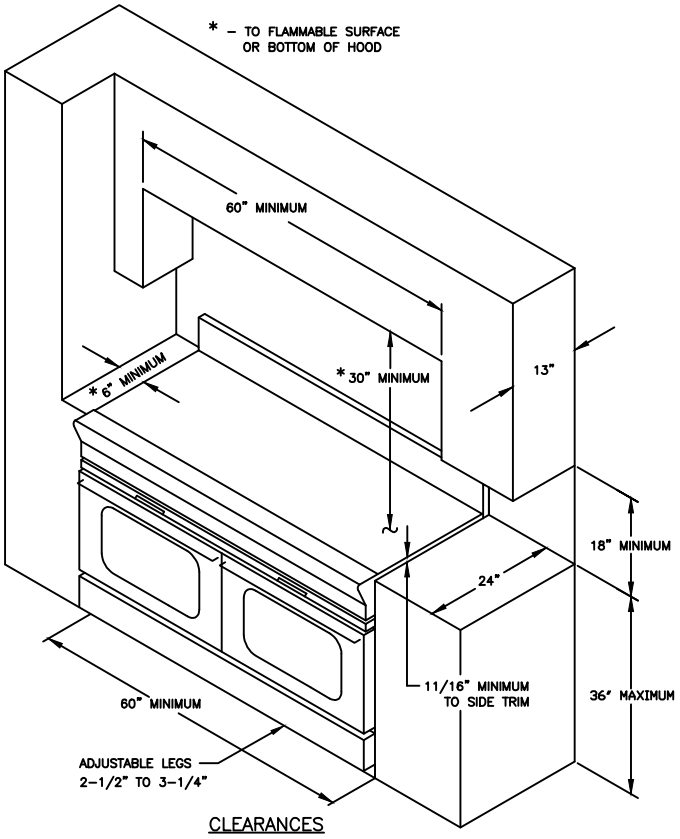

CLEARANCES